SIPROMAC

ANCIEN MANUEL
EDITION
OCT. 1990

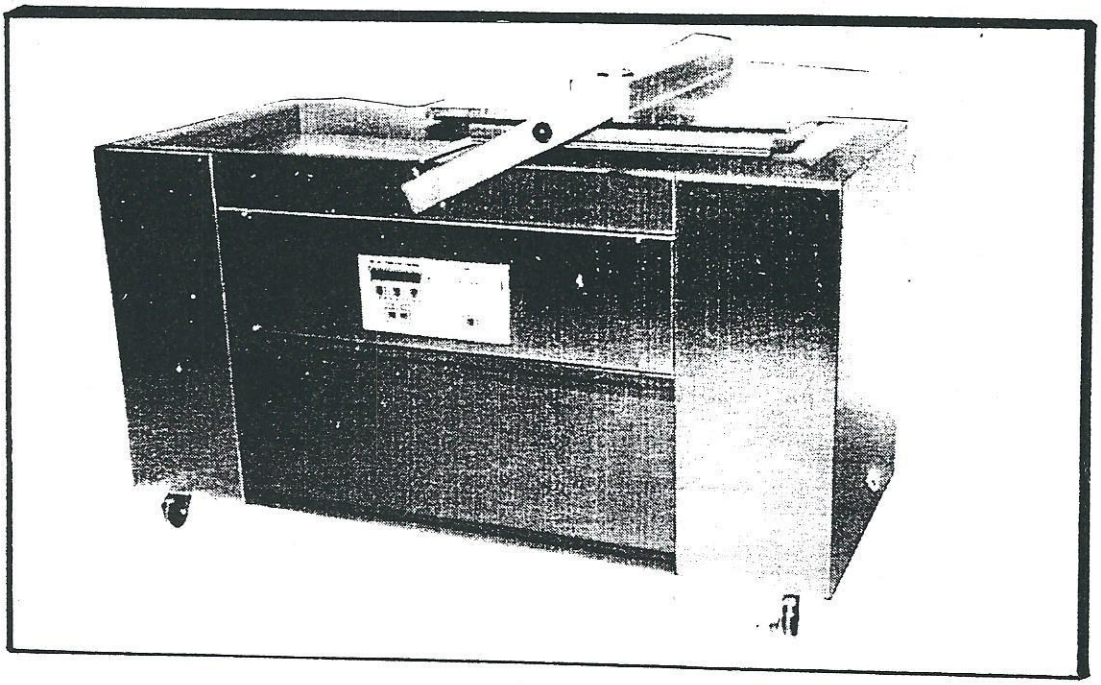

MODELE

SIPROMAC INC.

VACUUM PACKAGING CHAMBER

MODEL 600

GENERAL TABLE OF CONTENTS:

SIPROMAC INC.
2355, CANADIEN
DRUMMONDVILLE, QUÉBEC, CANADA
J2B 8A9
TÉL.: (819) 474-1282
FAX: (819) 474-3994

SIPROMAC

SIPROMAC INC

VACUUM PACKAGING MACHINES

OPERATION INSTRUCTION

TABLE OF CONTENTS:

SIPROMAC INC.
2355, CANADIEN
DRUMMONDVILLE, QUÉBEC, CANADA
J2B 8A9
TEL.: (819) 474-1222

SIPROMAC INC.

VACUUM PACKAGING MACHINES

OPERATION INSTRUCTIONS

1. SETTING UP THE MACHINE:

Before choosing the site for the machine, please consider that you will also need room for packaged and non-packaged products apart from the space needed for the machine itself.

Keep in mind that the machine must not be set up upon uneven ground. Especially with mobile models, the weight of the pump might then cause warping of the chamber. Then the lid will not fit closely upon the chamber and this gives a lot of avoidable troubles at operation.

Before starting to work, check at the oil view glass of the pump, whether there is a sufficient quantity of oil in the pump. Never use oil other than recommanded by the producer. Never exceed maximum quantity of oil indicated, when adding or changing oil.

Due to the oil viscosity, the machine is hard to start when temperatures are very low. Therefore the pump ought to be set up in a room with an air temperature of at least 50°F (+10°C). On the other hand, there must be free access of air to the pump to allow for cooling so that operation temperature of 160°F (70°C) is not exceeded.

2. ELECTRICAL CONNECTION:

Electrical connections must be made by qualified personnel. This person must make sure that the electrical entries corresponds to the proper voltage and amperage of the machine.

All vacuum machines have an electrical schematic in the electrical casing.

.../2

3.3 Setting of digital controls

INSTRUCTIONS

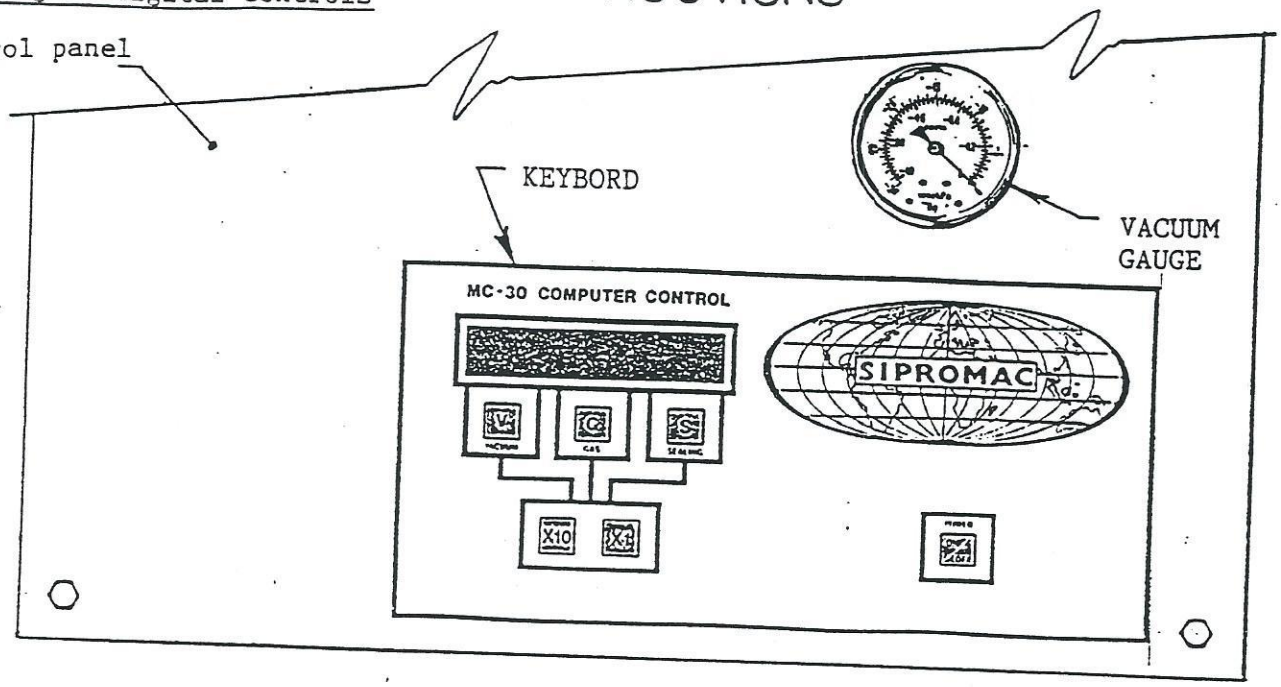

To turn on: Press the "Power On" key.
To turn off: Press the "Power Off" key.

To program the vacuum cycle:
1. Press the "V" key for about 3 seconds. The display will flash.
2. Indicate your desired timing by pressing on "X10" and/or "X1".
3. Press one more time on the "V" key. The display stays on.

To program the gas cycle:
1. Press the "G" key. The display will flash.
2. Indicate your desired timing by pressing on "X10" and/or "X1".
3. Press again on "G". The display stays on.

To program the sealing cycle:
1. Press the "S" key. The display will flash.
2. Indicate your desired timing by pressing on "X10" and/or "X1".
3. Press again on "S". The display stays on.

The micro-processor will memorize the last program you entered. The system functions with a 5 volts Cadium Nickel battery which lasts approximately 3 years and recharges automatically if your machine remains plugged in. You may notice, during the first few days of use, that your micro-processor does not keep your program in memory, it is absolutely normal due to the fact that your battery is not fully charged.

BASIC PROGRAM TO MODIFY ACCORDING TO THE PRODUCTS

MACHINE	"V"	* "G"	"S"
VAC - 350	20 sec.	AS NEEDED	1 - 3 sec.
VAC - 450	22 sec.	AS NEEDED	1 - 5 sec.
VAC - 550	25 sec.	AS NEEDED	1 - 5 sec.
VAC - 600	25 sec.	AS NEEDED	1 - 5 sec.
VAC - 650	27 sec.	AS NEEDED	1 - 7 sec.

modify your program, increase by "1" as desired by pressing on the "X1" key.
* If you do not use the gas option you have to program "00".
"V" --- indicated in seconds "G" --- indicated in seconds
"S" --- indicated in seconds and 10th of a second.

Warning: Do not increase the sealing time too much to prevent deteriorating the tefflons.

CON'T 3.3 SETTING OF DIGITAL CONTROLS

NOTE:

Pressing the "V" key during the vacuum cycle will stop the vacuum cycle and go to the next step (gas or sealing). This is especially useful to package liquids.

3.4 Daily cleaning:

For hygenic cleanliness, it is imperative to clean chamber and spacers daily. Also clean upper rim of the chamber as well as the lid rubber to assure tight seat of the lid. Regular application of talkum powder will increase working life of the lid rubber.

Check oil of the pump weekly and add if necessary. Only use oil types recommanded by the producer (see pump brochure).

Check vacuum hose for damage regularly, will save you a lot of avoidable trouble with machine breakdown.

WARNING

ALL ELECTRICAL WORK DESCRIBED IN THIS BROCHURE SOULD BE DONE BY A QUALIFIED AND AUTHORIZED TECHNICIAN.

4 TROUBLE SHOOTING:

4.1 Failure during a packaging cycle:

The lid is closed and cycle fails to start or stops immediatly after having started:

Micro switch is actuated too late, re-set the micro switch.

Fault in supply of electricity to the timing control (Power on light does not go on):

Check input voltage at transformer (Faulty contact in wires)

Check secondary voltage of transformer (Approx. 24 Volt AC)

Check fuse

If none of these applies; exchange electronic card.

4.2 Insufficient vacuum;

4.2.1 Leakage in the bag;

Most frequently, insufficient vacuum in bags is due to leakage in bag and not to any fault of the machine.

Pin-point leak for which there is no obvious explanation. Faulty bag material.

Pin-point leak caused by sharp edge of the product. (Bone, etc.) use bone-guard or thicker film.

Rent of tear in bag by careless handling (Sharp edge on filling table, damage made by retailer or customer).

Leakage in lateral or bottom seal, complain at supplier's.

4.2.2 No leakage in the bag;

Bag is too large, therefore the residue air remains visible (There is residue air of 0.4% of bag volume in each bag). Use bags of suitable size.

Evacuation time is too short:

Pressure bar is jammed and closes opening of bag during evacuation.

4.2.3 Insufficient vacuum in chamber;

If troubles described under 4.2.1 and 4.2.2 do not apply, there is something wrong with evacuation. To find the leakage quickly, check for leak with precision vacuumeter, going back step by step from the chamber to the pump.

At the chamber (measuring point at block valve) at maximum time of evacuation. If more than 6 torr, proceed to.

Directly at the pump, if more than 3 torr: Have pump serviced at pump supplier's workshop. If pressure at pump is all right:

Reconnect hoses to pump and measure again.

After the vacuum hose.

After the block valve.

With double chamber machine, after the air joint in lid.

Con't 4.2.3 Insufficient vacuum in chamber,

When proceeding this way, starting from pump, loss of pressure per step must not exceed 0.5 to 1 torr.

Warning: Keep in mind; absolute tightness of hoses and connections of measuring equipment.

Most frequent points of leakage: Lid gasket, damaged vacuum hose and loose hose clamps.

4.3 Faulty seal;

4.3.1 Insufficient seal;

Damaged teflon or silicone rubber.

Sealing pressure too low, membrane hose leaking or pressure bar jammed.

Leakers in seal (no homogenous sealline): heating wire mechanically damaged (knick by some blow, etc.) or silicone rubber uneven.

4.3.2 No seal;

Sealing wire burnt.

Faulty contact in sealing circuit

Sealing transformer burnt through.

Contactor does not work.

4.3.3 Permanent sealing current;

Contactor is jammed check sealing transformer for damage through overload.

4.3.4 Seal does not stick;

Insufficient layer of polyethylene (inferior quality of bags)

Seal area extremely contaminated by fat or meat juice. Use filling aid.

Sealing temperature is too low (when using very thick films)

Warning: Do not increase sealing time more than really necessary; higher temperature will reduce working life of teflon and silicone rubber.

4.4 Fault in the valves;

Vacuum or air valve does not open.

Check whether there is voltage on the portaining magnetic valves during their period of operation. If there is no voltage a wire is broken or the timing card is damaged.

If there is current, check change of vacuum and atmospheric pressure on hose from magnetic valve to block valve with the tip of your finger. If this is correct, the fault is in the block valve.

Lid does not open at the end of the cycle; air enters, but there is still a residue vacuum of 20 - 40% in the chamber. Vacuum valve does not close.

4.5

CONTROL BOARD FAILURE

PROBLEM	POSSIBLE CAUSE	
1 No display	1.1 Programmin error.	Press on/off switch or membrane switch
	1.2 No current coming to PC board.	Check fuses Check voltage between pins # 6 and # 13 on "D" connector, the reading should be approx. 9 AC volts. (transformer or wiring defect)
	1.3 On/off key defective	Disconnect flat cable between PC board and membrane switch and jump pins 1 and 2 or 7 and 8 using a screw-driver
	1.4 Defective PC board	Replace PC board
2 Two digits continously flashes on "V", "G" or "S"	2.1 Programming error	Press corresponding "V", "G", or "S" key
	2.2 Defective membrane switch	Replace membrane switch
	2.3 Defective PC board	Replace PC board
3 All of the display continiously flashes	3.1 Cover Switch remains closed	Check cover switch or continuity between pins # 8 and # 15 or PC board connector (see dwg #006-0029)
	3.2 Defective PC board	Replace

8 Machine "recycling" or cycle "Re-start continuously.	8.1 Poorly adjusted cover switch	Adjust
	8.2 Defective PC board	Replace
9 Double chamber: Vacuum sealing or atmosphere is not done on one side only	9.1 Defective relay or connection	Replace the 4PDT (in electrical box) This relay switch functions from one side to the other. (the PC board is good because there is one output which control's both sides)
	9.2 Defective contactor or valve	Test voltage on coil

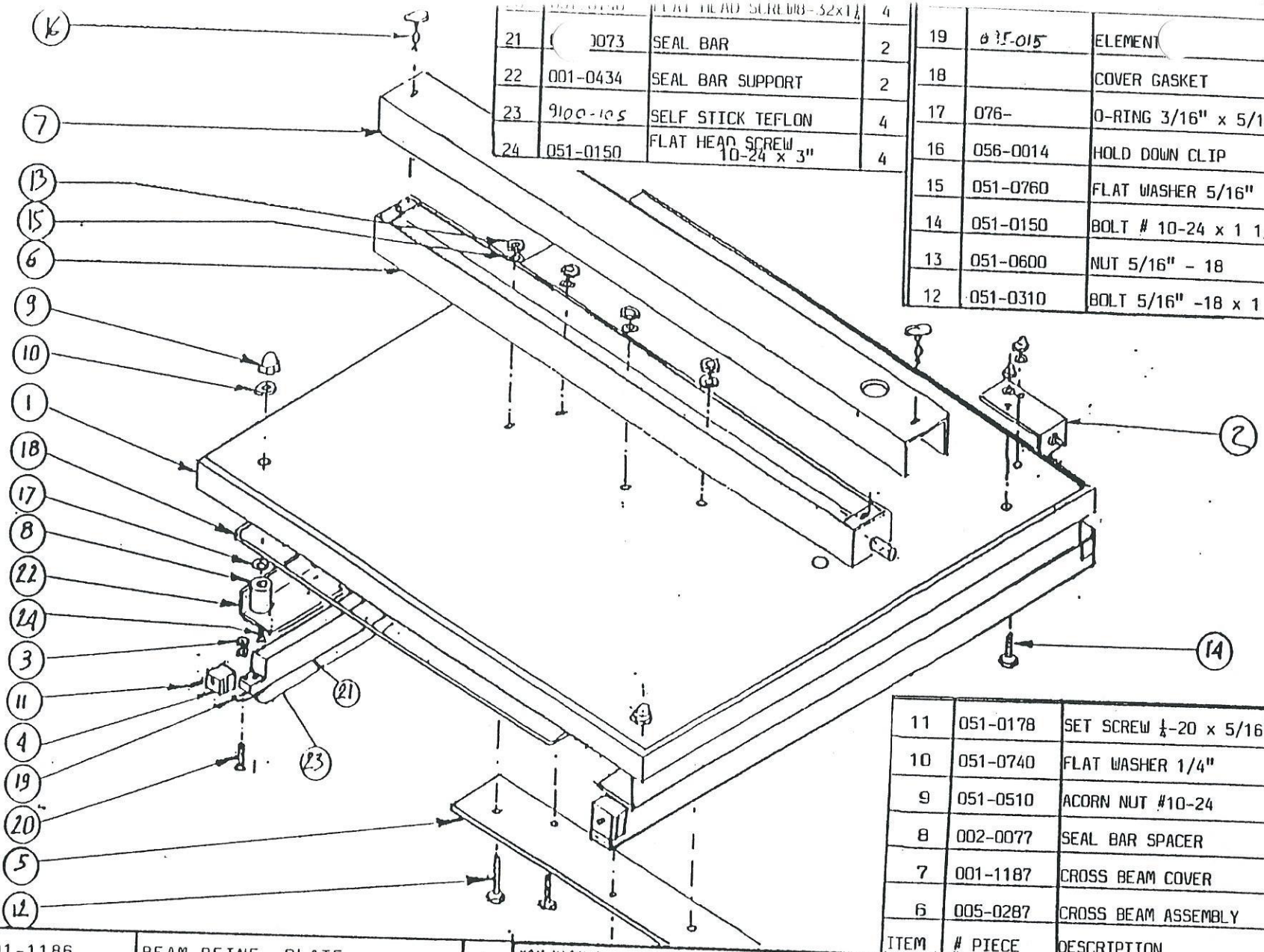

21	0073	SEAL BAR	2
22	001-0434	SEAL BAR SUPPORT	2
23	9100-105	SELF STICK TEFLON	4
24	051-0150	FLAT HEAD SCREW 10-24 x 3"	4

19	015-015	ELEMENT	2
18		COVER GASKET	1
17	076-	O-RING 3/16" x 5/16"	5
16	056-0014	HOLD DOWN CLIP	2
15	051-0760	FLAT WASHER 5/16"	4
14	051-0150	BOLT # 10-24 x 1 1/2"	1
13	051-0600	NUT 5/16" - 18	4
12	051-0310	BOLT 5/16" -18 x 1 1/2"	4

11	051-0178	SET SCREW ¼-20 x 5/16"	4
10	051-0740	FLAT WASHER 1/4"	5
9	051-0510	ACORN NUT #10-24	5
8	002-0077	SEAL BAR SPACER	4
7	001-1187	CROSS BEAM COVER	1
6	005-0287	CROSS BEAM ASSEMBLY	1
ITEM	# PIECE	DESCRIPTION	QTE

5	001-1186	BEAM REINF. PLATE	1
4	002-0062	CONNECTER	4
3	051-0550	NUT 8-32	8
2	005-0286	GUIDE SUPPORT ASSEMBLY	1
1	002-0254	COVER	
ITEM	# PIECE	DESCRIPTION	QTE

NOM MACHINE: VACUUM 600

NOM PIECE: COVER ASSEMBLY BI ACTIVE SEAL BAR (OPTION)

DEC. 1 | ECH. | NE PAS MESURER

MATERIEL | DESSINE | DATE | NO DESSIN

TOLERANCE: .0 ± .5 / .00 ± .005 / .000 ± .0005 / ANGLE ± 1°

SIPROMAC

DRUMMONDVILLE, QUEBEC, CANADA.

5. Regular Maintenance:

Routine controls to be made at regular intervals:

Check teflon for wear.

Check silicone rubber for burnt spots and smooth even position.

Check pressure bar for jamming.

Check lid sealing for damage and hardened spots.

Clean upper chamber rim.

Check switch-point of micro switch, adjust if necessary.

Check evacuation hose for damage (Contraction of diameter abrasions).

Check vacuum connections for tightness.

Check oil in pump (oil level in view glass;. Add if necessary. Regular exchange of oil - necessity indicated by change of colour).

Check vacuum in chamber with precision vacuumeter.

Check function of cycle with various settings of timers.

Sipromac Inc.
2355, Canadien
Drummondville. Québec
Canada J2B 8A9
(819) 474-1222

Fax: (819) 474-3994

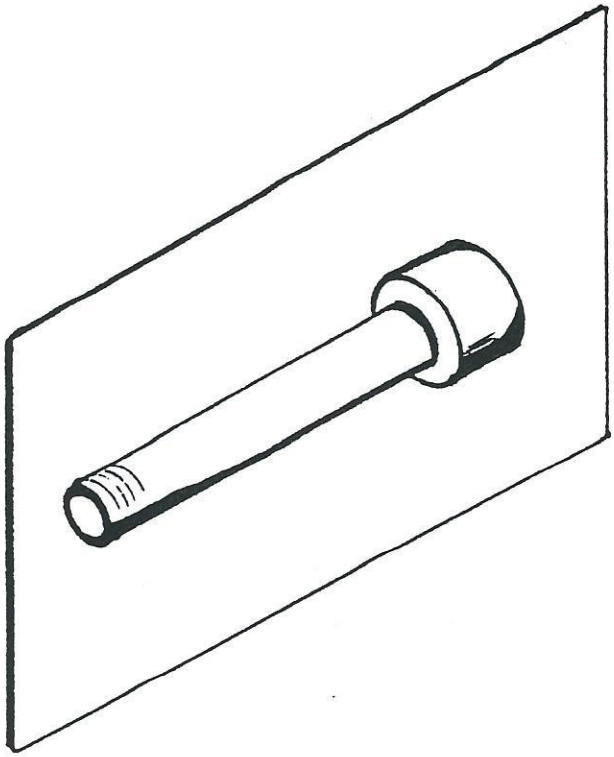

MECHANICAL DRAWING

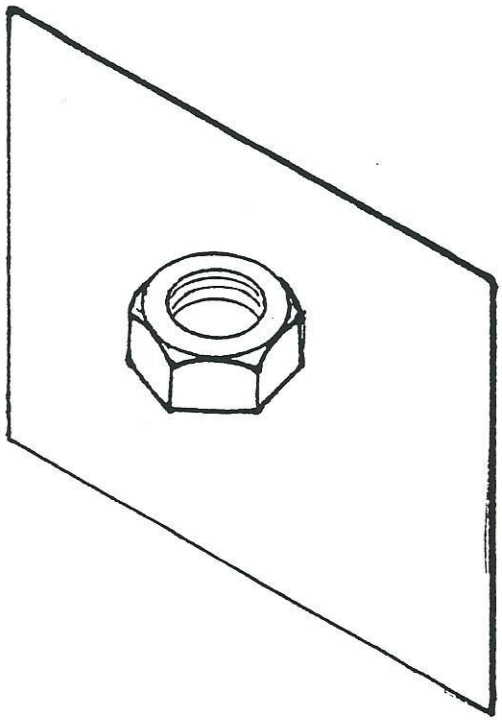

ITEM	# PIECE	DESCRIPTION	QTE
41	005-0299	BIACTIVE SEAL COVER (OPT)	1
40	002-0298	CONNECTER WEIGHT SPACER	2
39	051-0740	FLAT WASHER 1/4"	2
38	002-0299	CENTER ARM BUSHING	2
37	056-0005	SPRING PIN 5/16" x 2"	2
36	056-0004	SPRING PIN 3/16" x 2"	2
35	002-0297	SHAFT UNION	1
34	056-0012	CUTTER PIN 1/8" x 1"	1
33	051-0740	FLAT WASHER 1/4"	1
32	FB-46-2	BRONZE BUSHING ¼x3/8"x¼	1
31	005-0290	COVER GUIDE ARM ASSEMBLY	1
30	051-0740	FLAT WASHER 1/4"	1
28	051-0581	NYLON LOCKNUT 1/4"-20	2
27	005-0163	GUIDE ARM PIVOT SHAFT	1
25	052-4220	BOLT M 8-20	3
24	001-0199	PUMP SUPPORT	3
23	--------	VACUUM PUMP 63m³	1
22	051-0180	BOLT 1/4"-20 x 1/2"	2
21	001-0710	SWITCH SUPPORT	2
20	051-0580	NUT 1/4" - 20	1
19	056-0012	CUTTER PIN 1/8" x 1"	1
18	FB-46-2	BRONZE BUSHING ¼"x3/8"x¼"	1
17	002-0074	COVER ARM SPACER	1
16	005-0273	MEC. BAG CUT COVER ASSEM.	1
15	005-0272	STANDARD COVER ASS.	1
14	005-0284	REAR PANEL ASSEMBLY	1
13	051-0250	BOLT 1/4" -20 x 1 1/2"	2
12	004-0099	REAR ARM ASSEMBLY	1
11	002-0300	ARM BUSHING	1
10	051-0740	FLAT WASHER 1/4"	4
9	051-0581	NUT 1/4" - 20	2
8	002-0301	BODY ARM SPACER	1
7	051-0410	BOLT 3/8" - 16 x 2 3/4"	2
6	-------	CIRCLIP	1
5	001-1191	COUNTER WEIGHT SUPPORT	1
4	008-0277	COUNTER WEIGHT	1
3	002-0242	BOTTOM ARM BUSHING	1
2	005-0289	COUNTER WEIGHT SUPPORT AS	1
1	051-0620	NUT 3/8" - 16	2

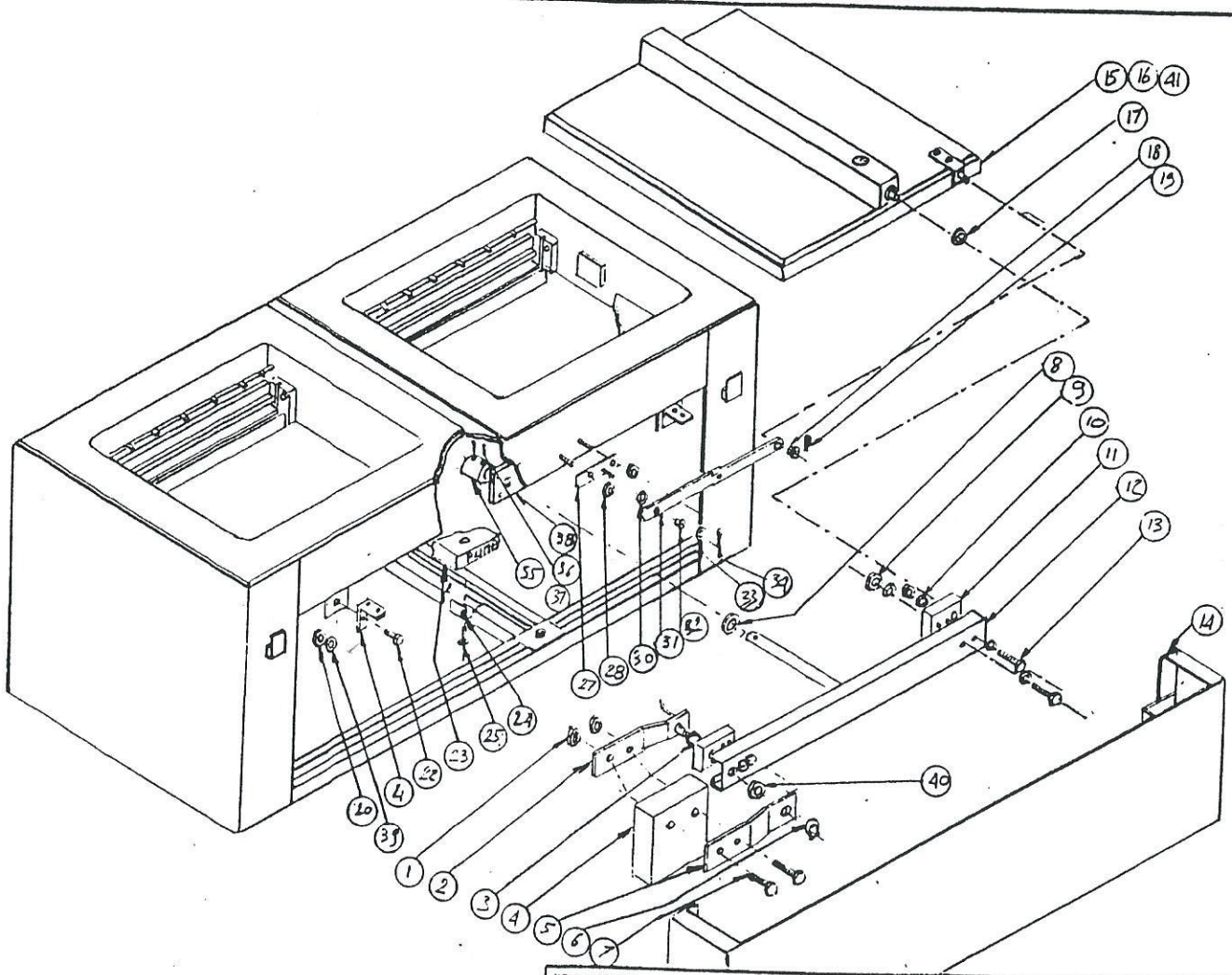

NOM MACHINE: VACUUM 600

NOM PIECE: ASSEMBLY REAR VIEW

QTE. 1 | ECH. | NE PAS MESURER

MATERIEL

TOLERANCE: 0 : .5 | .0 : .05 | .00 : .005 | .000 : .0005 | ANGLE : 1°

DESSINE: ALAIN | DATE: 90-08-23

APPR. | DATE

SIPROMAC INC.

DRUMMONDVILLE, QUEBEC, CANADA.

NO DESSIN: 005-0275

ITEM	# PIECE	DESCRIPTION	QTE
40	051-0180	BOLT 1/4"-20 x 1/2"	3
39	051-0740	FLAT WASHER 1/4"	6
38	005-0035	ELECTRIC BOX ASSEMBLY	1
37	-------	GASKET 3/8 Ø	1
36	001-0137	COVER	1
35	051-0740	FLAT WASHER 1/4"	4
34	051-0180	BOLT 1/4" -20 x 1/2"	4
33	005-	CHAMBER ASSEMBLY	1
32	051-0580	NUT 1/4" - 20	4
31	005-0291	PC BOARD SUPPORT	1
30	--------	SIPROMAC TOUCH PAD	1
29	002-0074	COVER SPACER	
28	005-	SPACER ASSEMBLY	1
27	002-0301	COVER ARM SPACER	1
25	051-0350	BOLT 3/8" -16 x 3/4"	1
24	051-0740	FLAT WASHER 1/4"	2
23	051-0581	NYLON LOCKNUT 1/4"-20	2
22	002-0300	ARM BUSHING	1
21	051-0250	BOLT 1/4" -20 x 1 1/2"	2
20	051-0740	FLAT WASHER 1/4"	2
19	051-001	BLACK PLASTIC KNOB	1
18	051-0780	FLAT WASHER 3/8"	1
17	004-0098	FRONT ARM ASSEMBLY	1
16	005-0127	CONTROL PANEL ASSEMBL	1
15	051-0591	ACORN NUT 1/4" - 20	4
14	051-0740	FLAT WASHER 1/4"	4
13	051-0250	BOLT 1/4" -20 x 1/2"	4
12	051-0581	NYLON LOCKNUT 1/4"-20	4
11	051-0580	NUT 1/4"-20	8
10	005	BODY ASSEMBLY	1
9	051-0581	NYLON LOCKNUT 1/4"-20	16
8	002-0057	SEAL BAR GUIDE	8
7	P425	TUBE CLAMPS	16
6	008-	TUBE (GAS INJECTION)	3
5	005-	GAS INJECT. BAR	4
4	005-0273	MEC. BAG CUT COVER AS	1
3	005-0272	COVER ASSEMBLY	1
2	005-0271	SEAL BAR ASSEMBLY	4
1	005-0270	SEAL BAR ASSEMBLY	4

ITEM	# PIECE	DESCRIPTION	QTE
46	002-0030	RIGHT SEAL BAR GUIDE OPTION MECA BAG CUT	4
45	002-0029	LEFT SEAL BAR GUIDE OPTION MECA BAG CUT.	4
44	051-0580	SCREW 1/4"-20	3
43	005-0299	COVER ASSEMBLY (BIACTIVE SEAL OPTION)	1
42	051-0740	FLAT WASHER 1/4"	4
41	008-119	SPACER BLACK PLASTIC KNOB	1

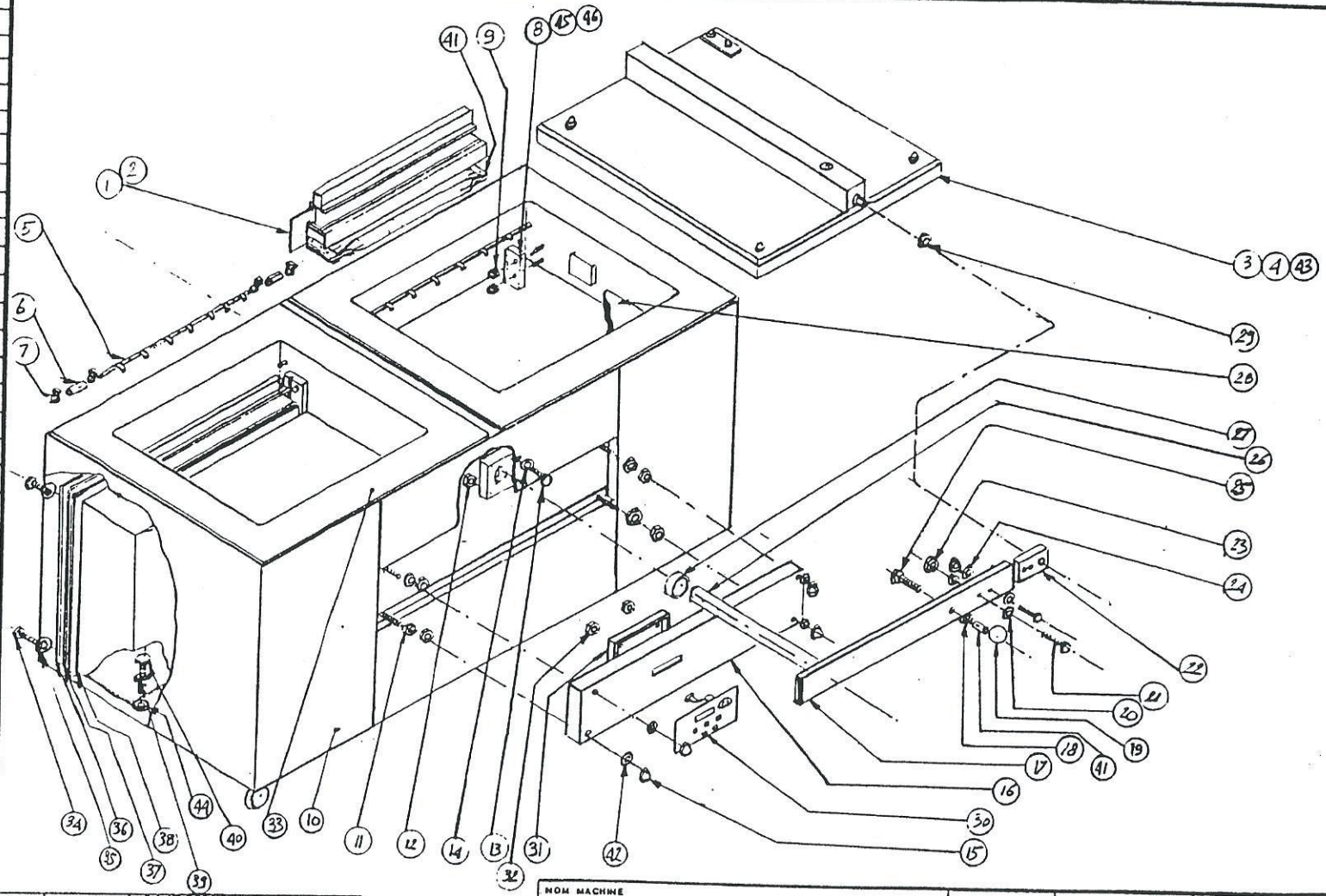

NOM MACHINE: VACUUM 600		TOLERANCE: a : .5 / .0 : .05 / .00 : .005 / .000 : .0005 / ANGLE : 1°	SIPROMAC — DRUMMONDVILLE, QUEBEC, CANADA.
NOM PIECE: ASSEMBLY FRONT VIEW			
QTE. 1	ECH.	NE PAS MESURER	
MATERIEL	DESSINE: ALAIN	DATE: 90-08-23	NO DESSIN: 005-0274
	APPR.	DATE	

ITEM	# PIECE	DESCRIPTION	QTE
1	002-0063	SEAL BAR	4
1	009-0021	BAG CUT SEAL BAR (OPTION)	4
2	002-0031	CONNECTER	8
3	095 015	SEALING ELEMENT	8
3	095 015	SEALING ELEMENT (OPTION BAG CUT)	4
4	051-0178	HEX SOCKET SET SCREW	16
5	-------	BAG CUT WIRE (OPTION)	4
6	051-0140	FLAT SLOTTED SCREW #8-32 x 1 1/4"	8
7	051-0550	NUT # 8-32	8
8	9100 105	SELF STICK TEFLON TAPE	4
9			
10	005-0226	SEAL BAR SUPPORT ASSEMBLY	4
11			
12	051-0190	BOLT 1/4"-20 x 3/4"	16
13	051-0740	FLAT WASHER 1/4"	16
14	005-0148	BELLOWS ASSEMBLY	4

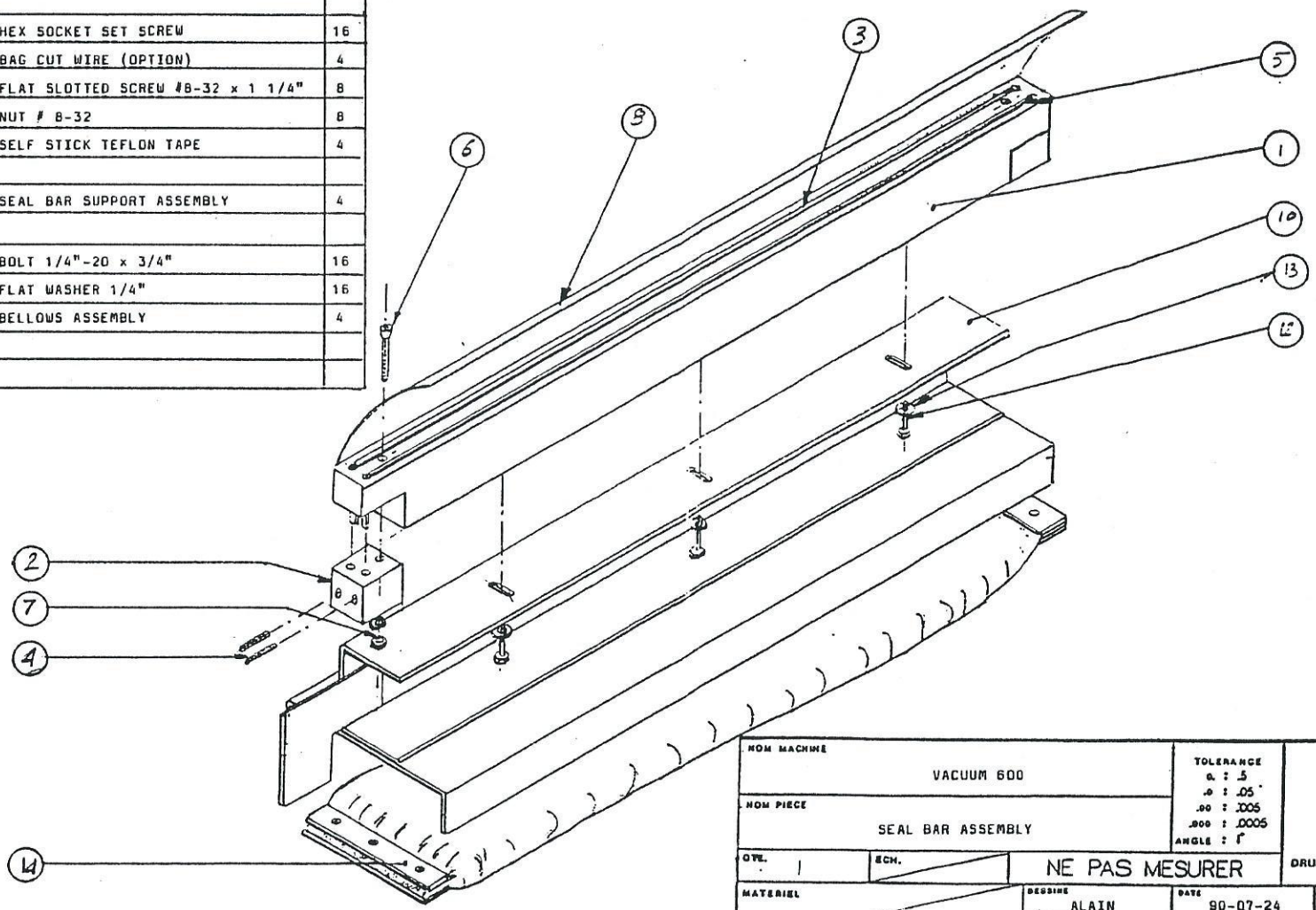

NOM MACHINE: VACUUM 600		TOLERANCE: 0. : .5 ; .0 : .05 ; .00 : .005 ; .000 : .0005 ; ANGLE : 1°	SIPROMAC DRUMMONDVILLE, QUEBEC, CANADA.
NOM PIECE: SEAL BAR ASSEMBLY			
QTE. 1	ECH.	NE PAS MESURER	
MATERIEL	DESSINE: ALAIN	DATE: 90-07-24	NO DESSIN: 005-0270
	APPR: DAVE	DATE: 90-08-10	

ITEM	# PIECE	DESCRIPTION	QTE
30	051-0740	FLAT WASHER 1/4"	5
29	005-0288	GUIDE SUPPORT ASSEMBLY	1
28	076-	O-RING 3/16" x 5/16"	5
27	051-0740	WASHER 1/4"	1
26	051-0580	NUT 1/4" - 20	1
25	001-1189	SPACER	2
24	001-0778	SEAL BAR SUPPORT	2
23	051-0740	FLAT WASHER 1/4"	6
22	051-0580	NUT 1/4" - 20	6
21	--------	COVER GASKET 3/8" Ø	1
20	051-	SOCKET HEAD CAP SCREW 1/4-20 x 1 1/4"	6
19	051-0250	BOLT 1/4" - 20 x 1 1/2"	4
18	008-0276	RUBBER SEAL BAR	2
17	051-	FLAT HEAD SCREW #10-24 x 3 1/8	6
16	001-0093	RUBBER SEAL HOLDER	2
15	002-0198	SEAL BAR SUPPORT	2
14	--------	SPRING 9/32" Ø x 20	8
13	002-0197	SEAL BAR GUIDE FRONT	2
12	002-0240	SEAL BAR GUIDE REAR	2
11	001-1161	SPACER	2
10	008-0267	CUTTING BLADE	2
9	001-1160	BLADE SUPPORT	2
8	051-0310	BOLT 5/16" - 18 x 1 1/2"	4
7	001-1186	BEAM REING. PLATE	1
6	002-0254	COVER	1
5	005-0287	CROSS BEAM ASSEMBLY	1
4	051-0760	FLAT WASHER 5/16"	4
3	051-0600	NUT 5/16" - 18	4
2	001-1187	CROSS BEAM COVER	1
1	056-0014	HOLD DOWN CLIPS	2

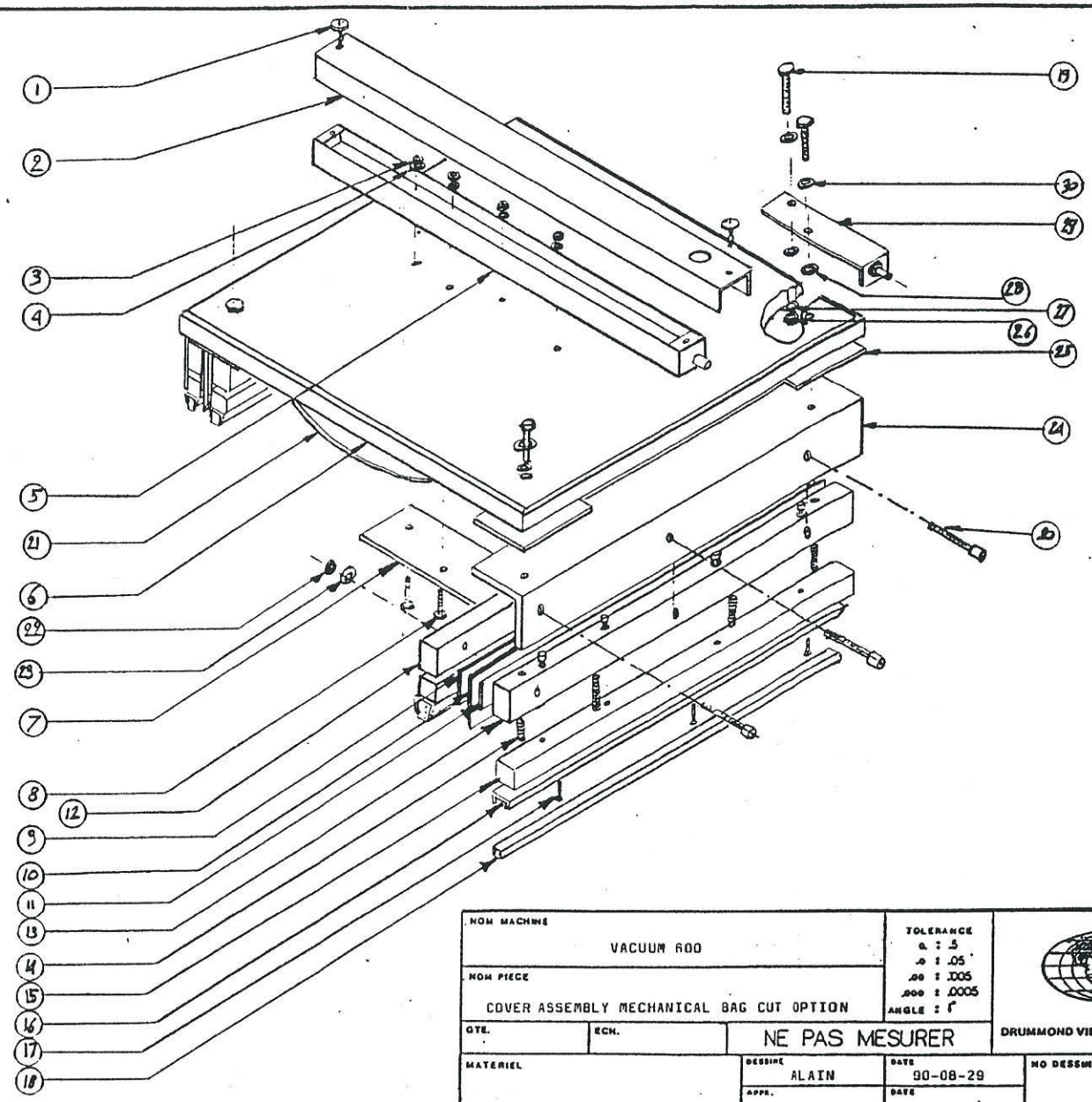

NOM MACHINE: VACUUM 600		TOLERANCE: .0 ± .5; .00 ± .05; .000 ± .005; .0000 ± .0005; ANGLE ± 1°	SIPROMAC — DRUMMONDVILLE, QUEBEC, CANADA.
NOM PIECE: COVER ASSEMBLY MECHANICAL BAG CUT OPTION			
QTE.	ECH.	NE PAS MESURER	
MATERIEL	DESSINE: ALAIN	DATE: 90-08-29	NO DESSIN: 005-0273
	APPR.	DATE	

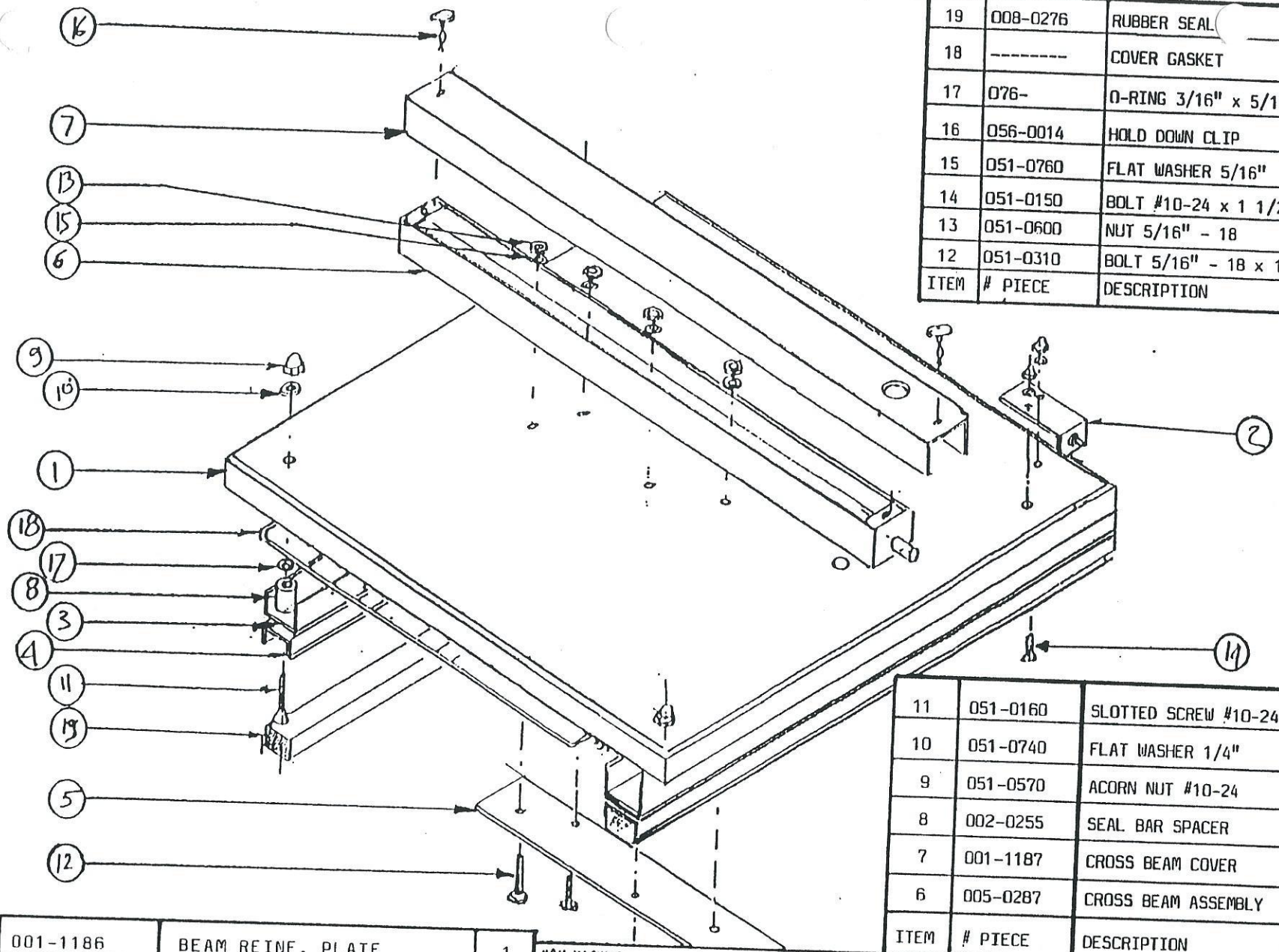

ITEM	# PIECE	DESCRIPTION	QTE
19	008-0276	RUBBER SEAL	2
18	--------	COVER GASKET	1
17	076-	O-RING 3/16" x 5/16"	5
16	056-0014	HOLD DOWN CLIP	2
15	051-0760	FLAT WASHER 5/16"	4
14	051-0150	BOLT #10-24 x 1 1/2"	1
13	051-0600	NUT 5/16" - 18	4
12	051-0310	BOLT 5/16" - 18 x 1 1/2	4

ITEM	# PIECE	DESCRIPTION	QTE
11	051-0160	SLOTTED SCREW #10-24x3'	4
10	051-0740	FLAT WASHER 1/4"	5
9	051-0570	ACORN NUT #10-24	5
8	002-0255	SEAL BAR SPACER	4
7	001-1187	CROSS BEAM COVER	1
6	005-0287	CROSS BEAM ASSEMBLY	1

ITEM	# PIECE	DESCRIPTION	QTE
5	001-1186	BEAM REINF. PLATE	1
4	001-0093	RUBBER SEAL HOLDER	2
3	001-1182	SEAL BAR SUPPORT	2
2	005-0286	GUIDE SUPPORT ASSEMBLY	1
1	002-0254	COVER	1

NOM MACHINE: VACUUM 600

NOM PIECE: COVER ASSEMBLY

DEC. 1 | ECH.

MATERIEL

TOLÉRANCE: .0 ± .5 / .0 ± .05 / .00 ± .005 / .000 ± .0005 / ANGLE ± 1°

NE PAS MESURER

SIPROMAC

DRUMMONDVILLE, QUEBEC, CANADA.

DESSINÉ: ALAIN | DATE: 90-07-23

APPR.: DAVE | DATE: 90-08-10

NO DESSIN: 005-0272

4 Impossible to program any timer (all of the display is on)	4.1 Programming error	Press "V", "G" or "S" to be in programming mode. Only 1 timer at a time.
	4.2 Defective PC board	Replace PC board
5 Impossible to program one timer (V,G, or S) (all of the display is on) (see step 4 first)	5.1 Defective membrane switch	Replace membrane switch
	5.2 Defective PC board	Replace PC board
6 PC board doesn't keep ata in memory	6.1 Battery not charged	Run the machine or leave it pluged in with switch in off position for a few hours to charge battery.
	6.2 Defective battery	Replace battery or complete PC board (the battery is mounted on the PC board)
	6.3 Defective PC board	Replace PC board
Cycle dosen't start	7.1 Poorly adjusted cover Switch	Adjust
	7.2 Bad connection or defective limit switch	Verify
	7.3 Defective PC board	Replace PC board
	7.4 PC board is OK,outputs are defective (dwg #006-0029)	Ckeck pump fuses, pump contactor coil, valves etc.

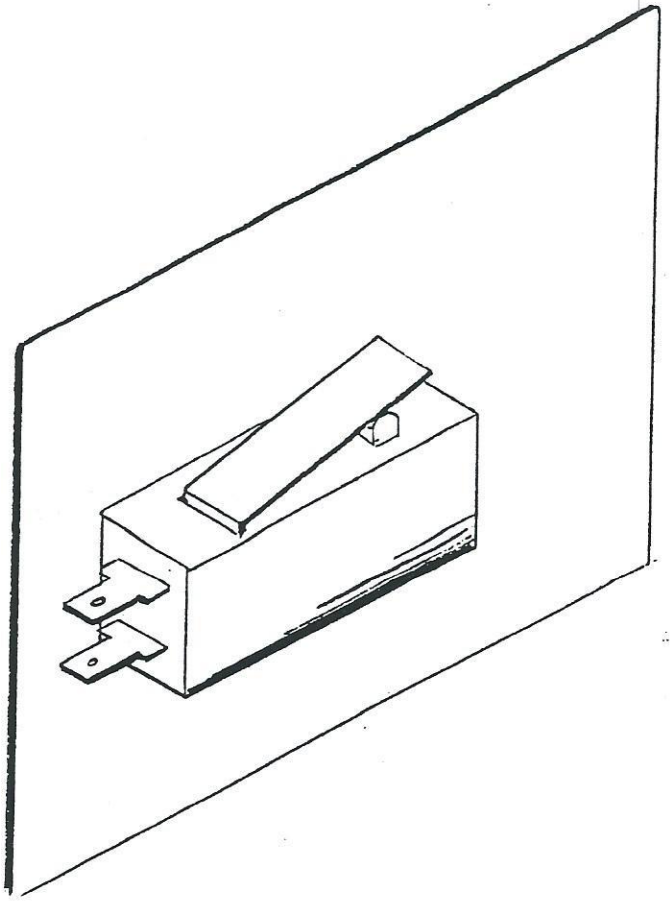

ELECTRICAL DRAWING

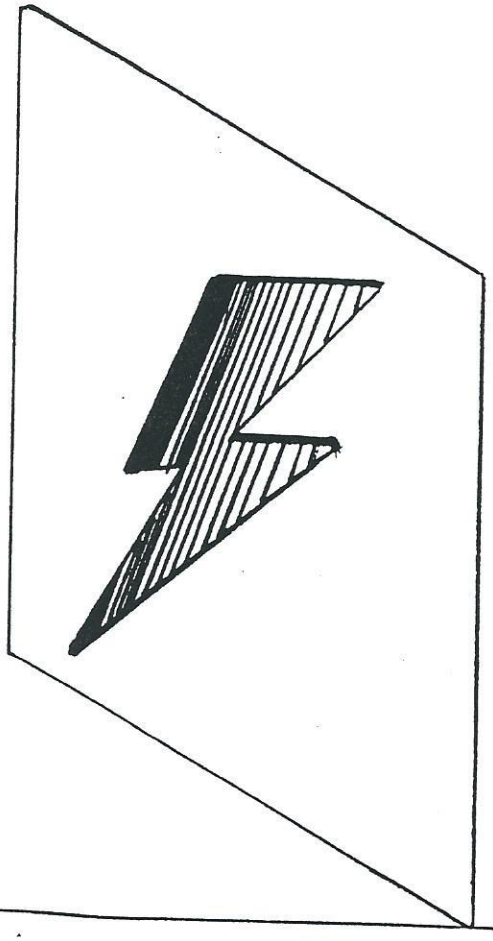

WIRING OF 15 PINS "D" CONNECTOR ON SIPROMAC VACUUM PACKAGING MACHINE

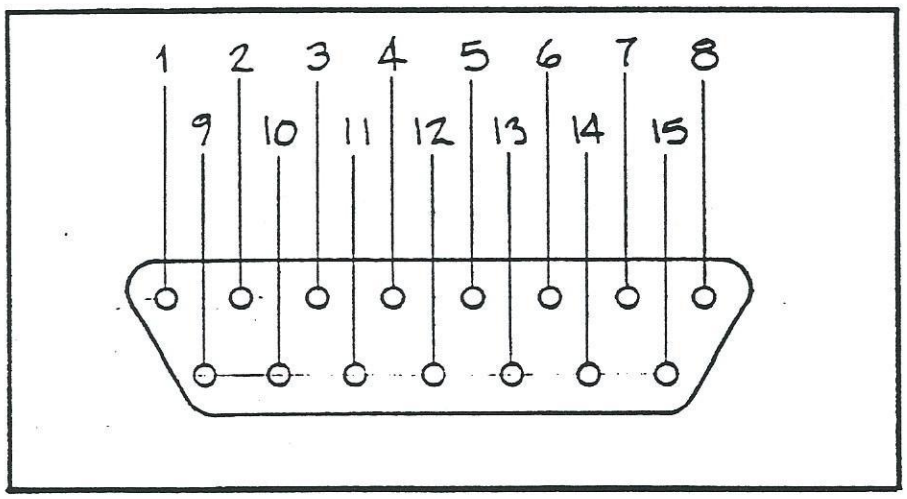

COLOR CODE

1- BLACK : OUTPUT TO ATMOSPHERE VALVE
2- WHITE : OUTPUT TO SEALING CONTACTOR

3- GREEN : OUTPUT TO GAZ VALVE
4- RED : CONTACT OF PC BOARD RELAY

PC BOARD RELAY

5- BLACK : CONTACT OF PC BOARD RELAY ACTIVATE WHEN MACHINE IS ON
6- YELLOW: INPUT: 9 VOLTS +

7- ------: JUMPED WITH # 6

8- WHITE : TO COVER SWITCH
10- RED : OUTPUT TO VACUUM VALVE

9- ------: NOT USED

11- BLACK : OUTPUT TO SEALING SELENOID VALVE
13- ORANGE: INPUT: 9 VOLTS -

COVER SWITCH

14- ------: JUMPED WITH # 13

12- BLACK : INPUT 24 VAC
15- BROWN : TO COVER SWITCH

NOM MACHINE: VACUUM		TOLERANCE 0. : .5 mm .0 : .01 mm .00 : .001mm .000 : .0001mm ANGLE : 0.30°	SIPROMAC DRUMMONDVILLE, QUEBEC, CANADA.
NOM PIECE: WIRING DIAGRAM 15 PINS			
QTE.	ECH.	FILIERE	OP.
MATERIEL	DESSINE: DAVE A	DATE: 90-07-10	NO DESSIN: 006-0029
	APPR.	DATE	

006-0034

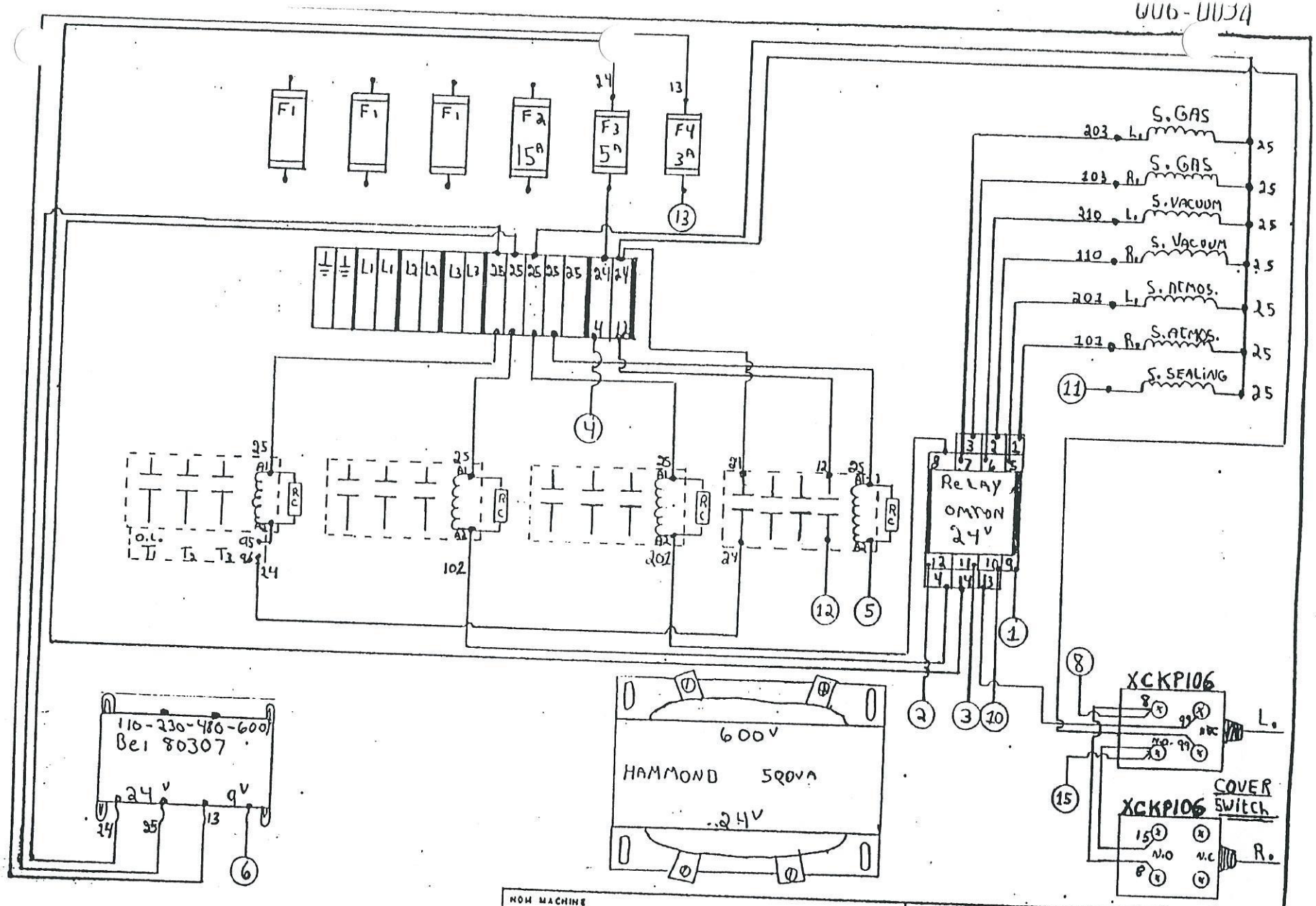

ALL CIRCLED NUMBER WIRES GO TO P.C. BOARD

NOM MACHINE: VACUUM 600 ET 420	TOLERANCE: a ± .5, .0 ± .05, .00 ± .005, .000 ± .0005, ANGLE ± 1°	SIPROMACK	
NOM PIECE: ELECTRICAL WIRING Low Voltage.			DRUMMONDVILLE, QUEBEC, CANADA.
OTE. / ECH.	NE PAS MESURER		
MATERIEL	DESSIN: Y. M.	DATE: 89-01-24	NO DESSIN: 006-0034
	APPR.	DATE	

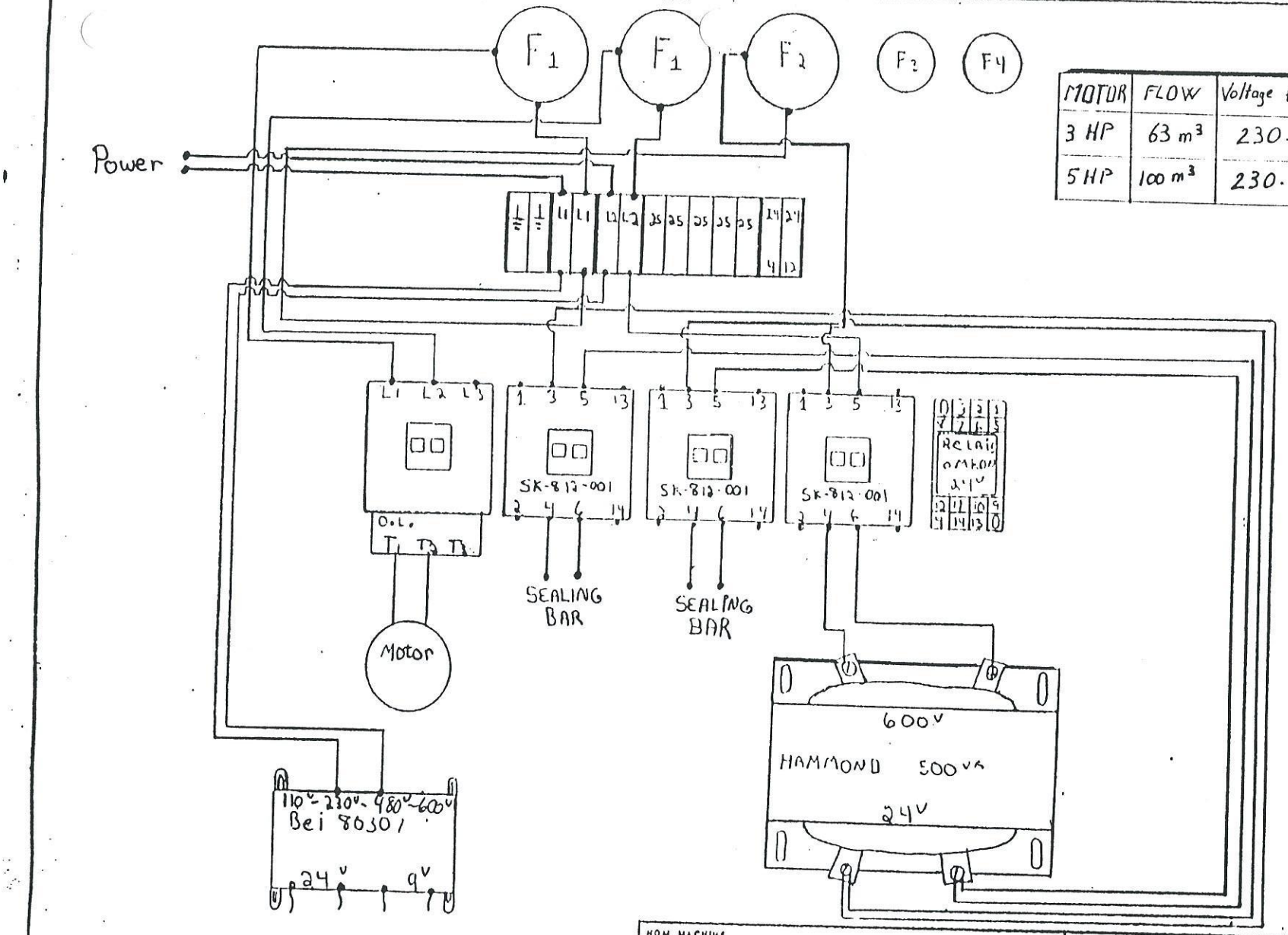

MOTOR	FLOW	Voltage + Phase	PHUSE
3 HP	63 m³	230-1	MCL-30
5 HP	100 m³	230-1	MEN-25

NOM MACHINE: VACUUM 600 ~ 1Ø

NOM PIECE: ELECTRICAL wiring Hight Voltage

DTE. ____ TCH. ____

NE PAS MESURER

TOLERANCE: ± 1 .5 / .0 ± .05 / .00 ± .005 / .000 ± .0005 / ANGLE ± 1°

SIPROMAC

DRUMMONDVILLE, QUEBEC, CANADA.

MATERIEL ____

DESSINE: Y. M

DATE: 89-01-26

NO DESSIN: 006 - 0039

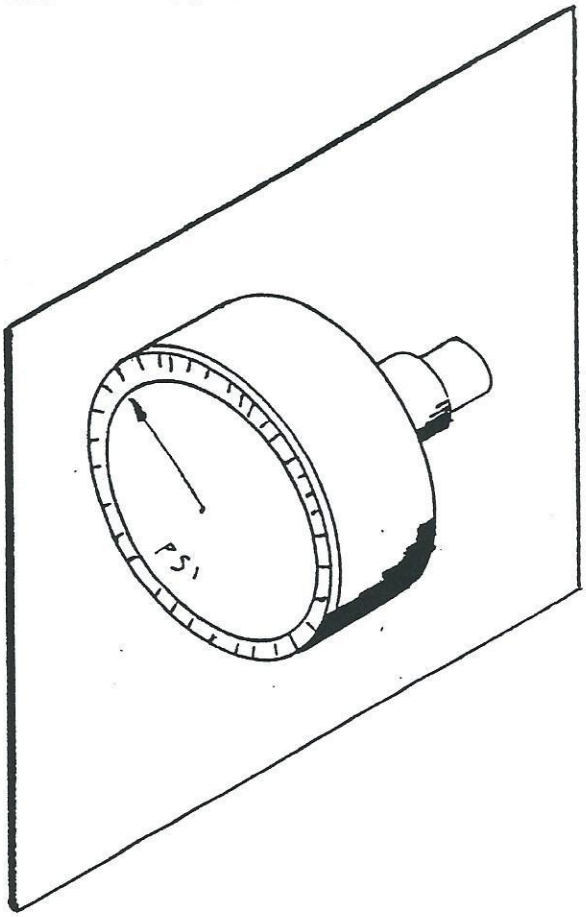

PNEUMATIC DRAWING

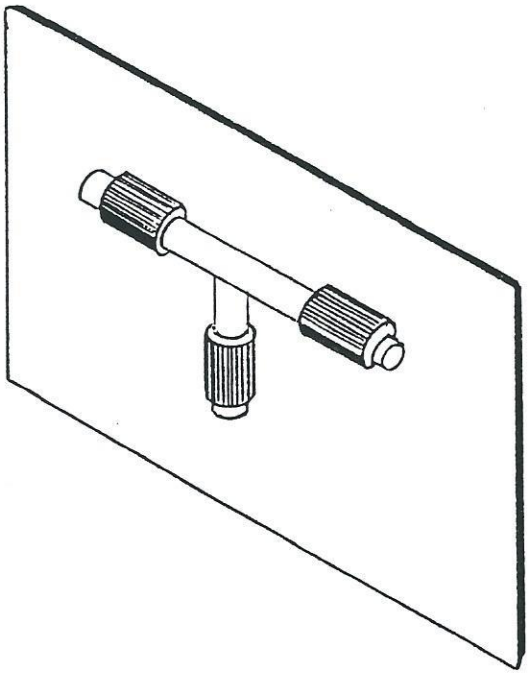

007-0019

ITEM	# PIECE	DESCRIPTION	QT.
1	106-8262G22	GAS VALVE	2*
2	———	VACUUMETER	1
3A	106-8320G176	BELLOWS VALVE	1
3B	106-8320G176	BELLOWS VALVE	1*
4	———	PRESSURE REGULATOR	1*
5	106-8210G95	ATMOSPHERE VALVE FOR 420A	1
	106-8210G95	ATMOSPHERE VALVE FOR 600A, 063M³ AND 100 M³	
	106-8215B60	ATMOSPHERE VALVE FOR 600A & 620A: 160 M³ AND 250 M³	
	106-8215B60	ATMOSPHERE VALVE FOR 650A & 700A	
6	106-8210G95	VACUUM VALVE FOR 420A	1
	106-8215B60	VACUUM VALVE FOR 600A & 620A	
	106-8215B80	VACUUM VALVE FOR 650A & 700A	
*: OPTION			

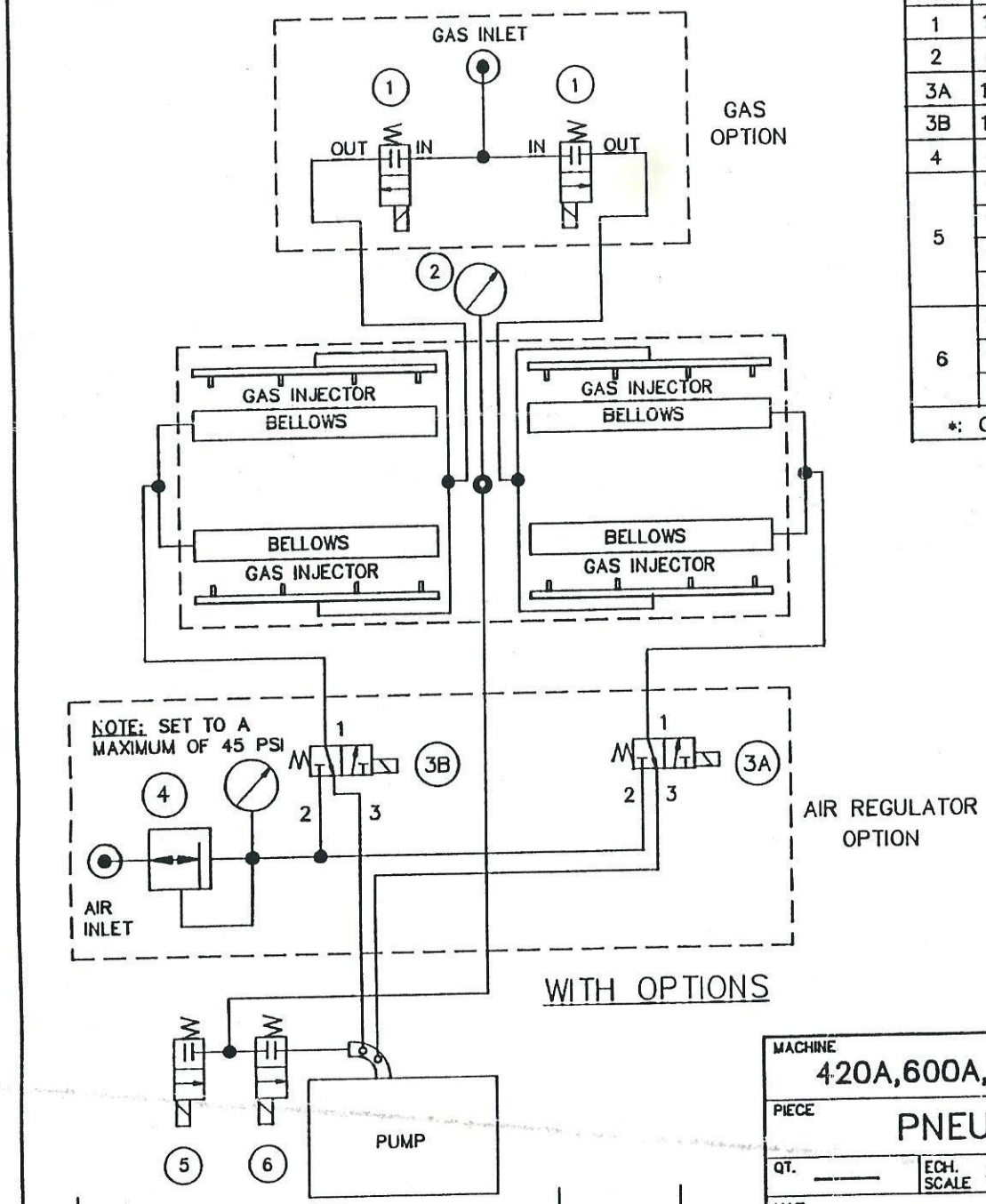

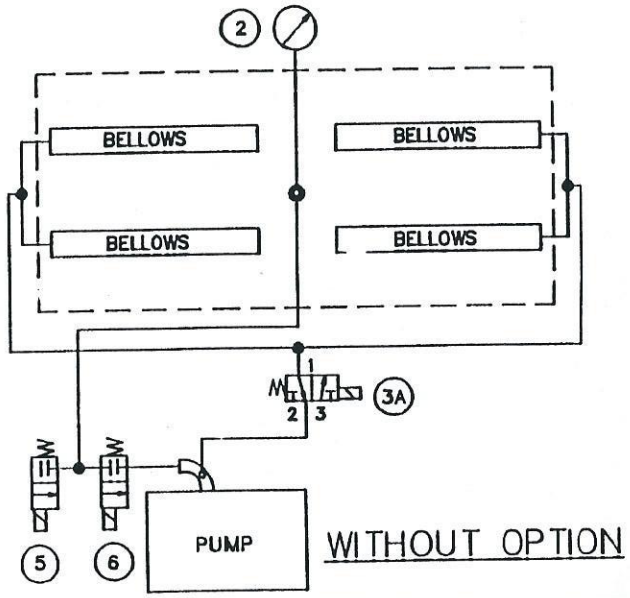

LET.	MODIFICATION	DATE	INT.

MACHINE: 420A,600A,620A & 650A

PIECE: PNEUMATIC

QT. ——— ECH. SCALE ———

MAT:

METRIC TOLERANCE: 0. ± .5 / .0 ± .05 / .00 ± .005 / .000 ± .0005 / ANGLE ± 1°

INCH TOLERANCE: .0 ± .015" / .00 ± .005" / .000 ± .0005"

NE PAS MESURER /N.T.S.

DESS. M.LAVIGNE DATE 94-03-03

APP. Y.M. DATE 94-03-04

SIPROMAC
ST-GERMAIN DE GRANTHAM, QUEBEC CANADA

NO. 007-0019

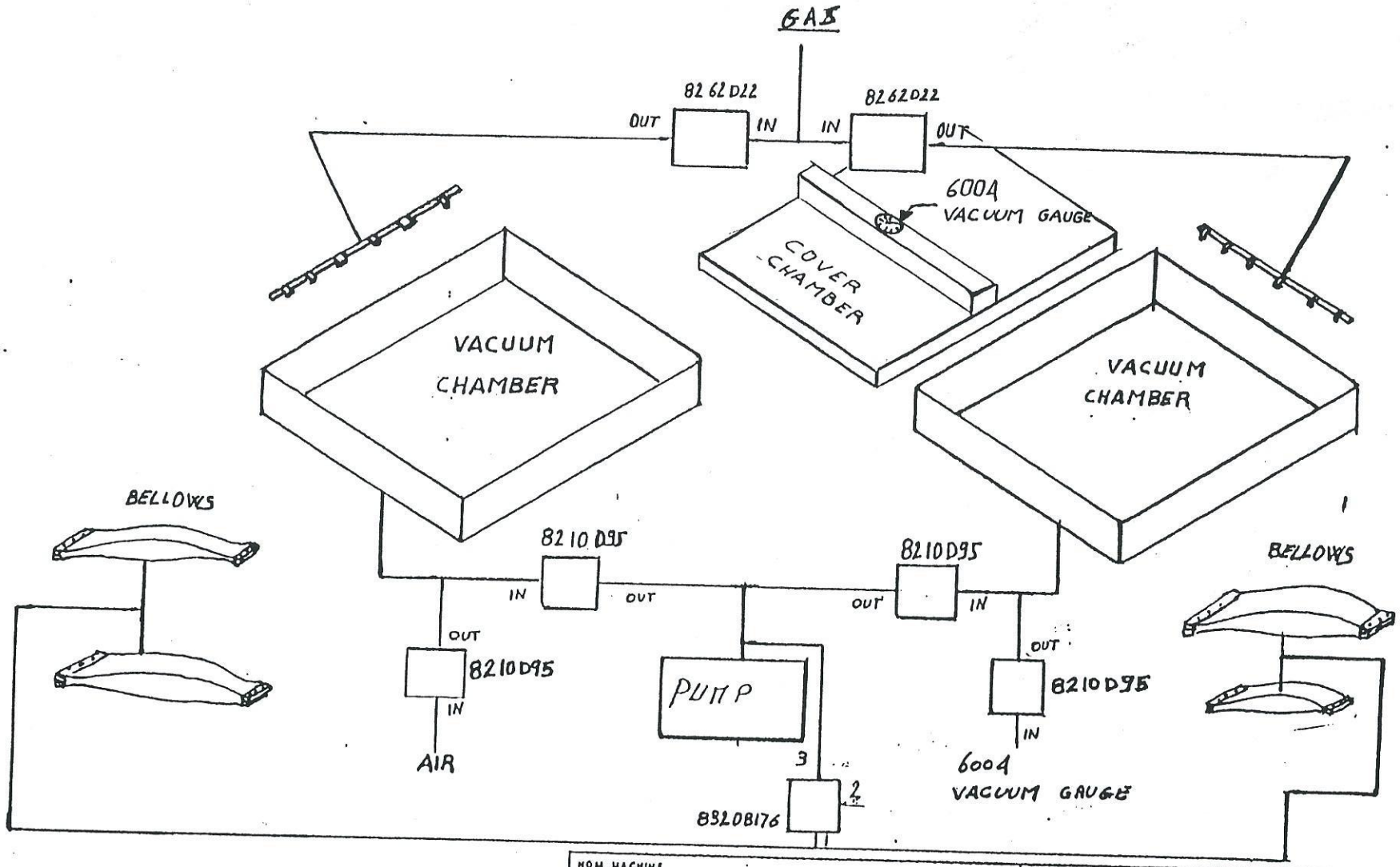

NOM MACHINE: VACUUM 600		TOLÉRANCE: .0 ± .5; .00 ± .05; .000 ± .005; .0000 ± .0005; ANGLE ± 1°	SIPROMAC, DRUMMONDVILLE, QUEBEC, CANADA.
NOM PIECE: PNEUMATIC DRAWING			
QTÉ. —	ÉCH. —	NE PAS MESURER	
MATERIEL —	DESSINÉ ALAIN	DATE 90-08-23	NO DESSIN 007-0019
	APPR.	DATE	

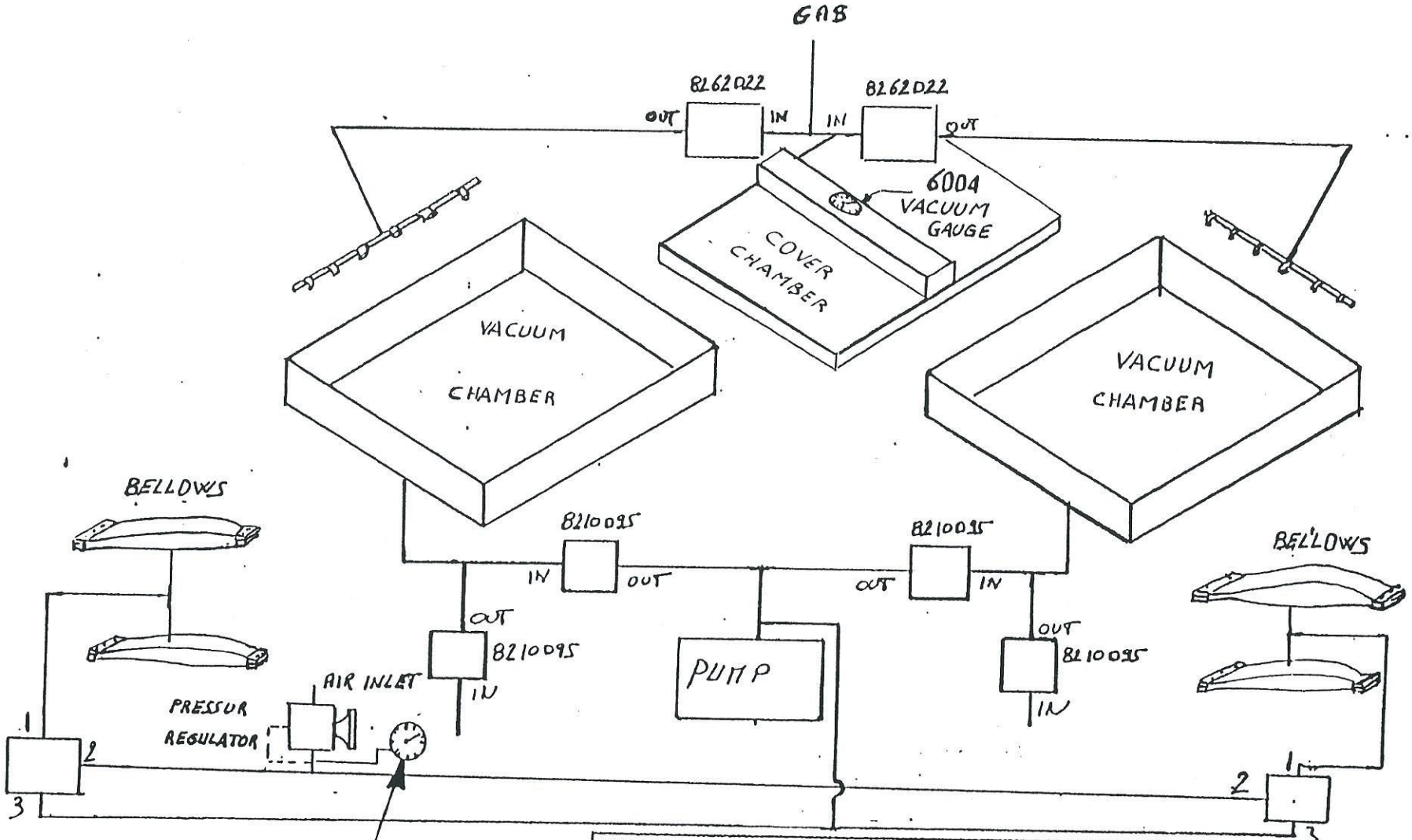

SET TO A MAXIMUM OF 30 PSI

NOM MACHINE: VACUUM 600		TOLERANCE: .0 ± .5; .00 ± .005; .000 ± .0005; ANGLE ± 1°	SIPROMAC
NOM PIECE: PNEUMATIC DRAWING PRESSUR REGULATOR OPTION			DRUMMONDVILLE, QUEBEC, CANADA.
DEC. —	ECH. —	NE PAS MESURER	
MATERIEL: —	DESSINE: ALAIN	DATE: 90-08-23	NO DESSIN: 007 0020
	APPR.	DATE	

NEAL

Vacuum Pannedu avant

450
550
600
650

5 BLUE

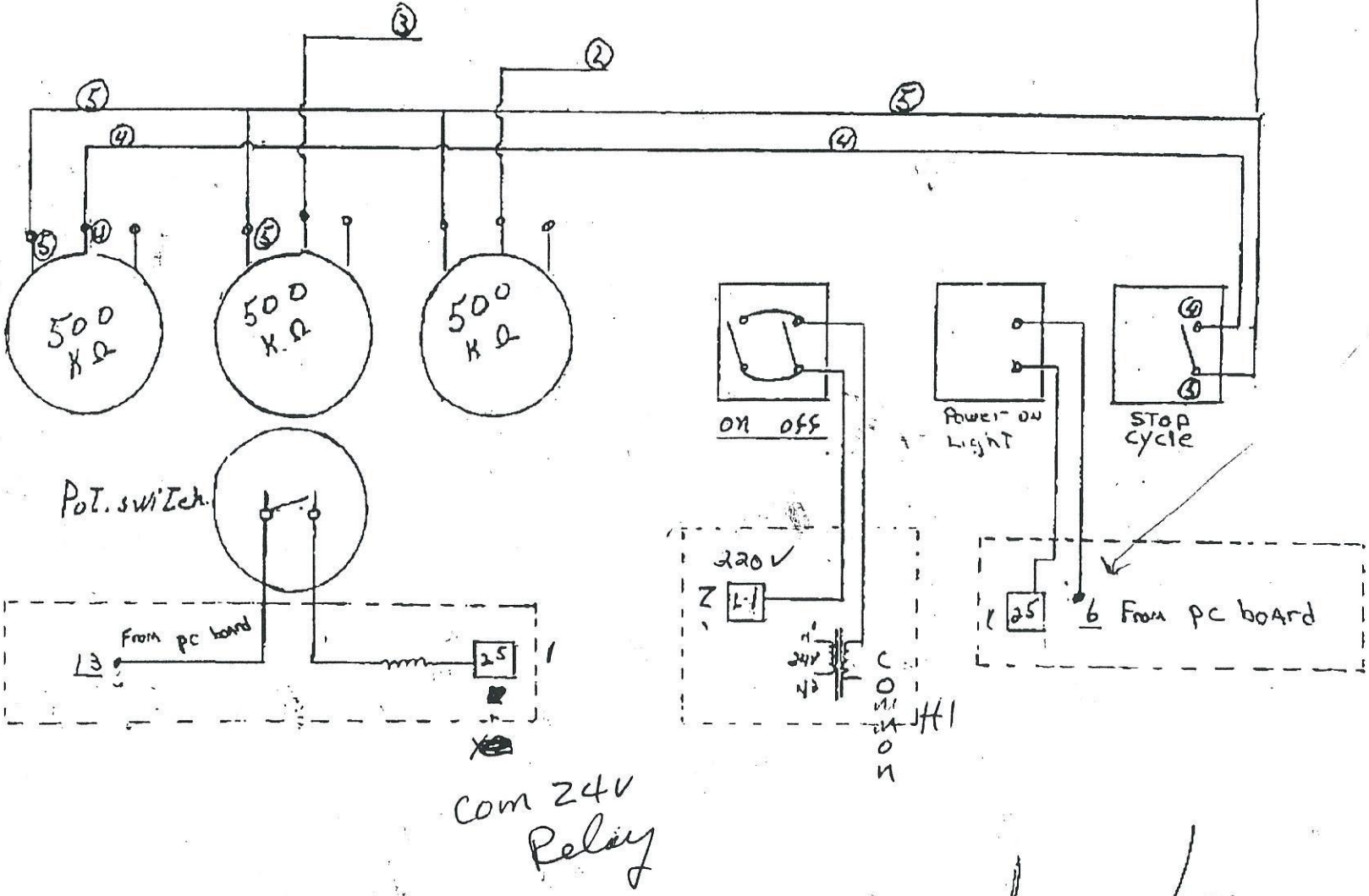

#8 LIGHT

8-12-8:

Att: Shelley 856 2150

MACHINE: VACUUM	ELECTRICAL DIAGRAM	SIPROMAC	NO: E-8
MODEL : 650 - 220 V. 3 PHASES			DATE : 06-10-07

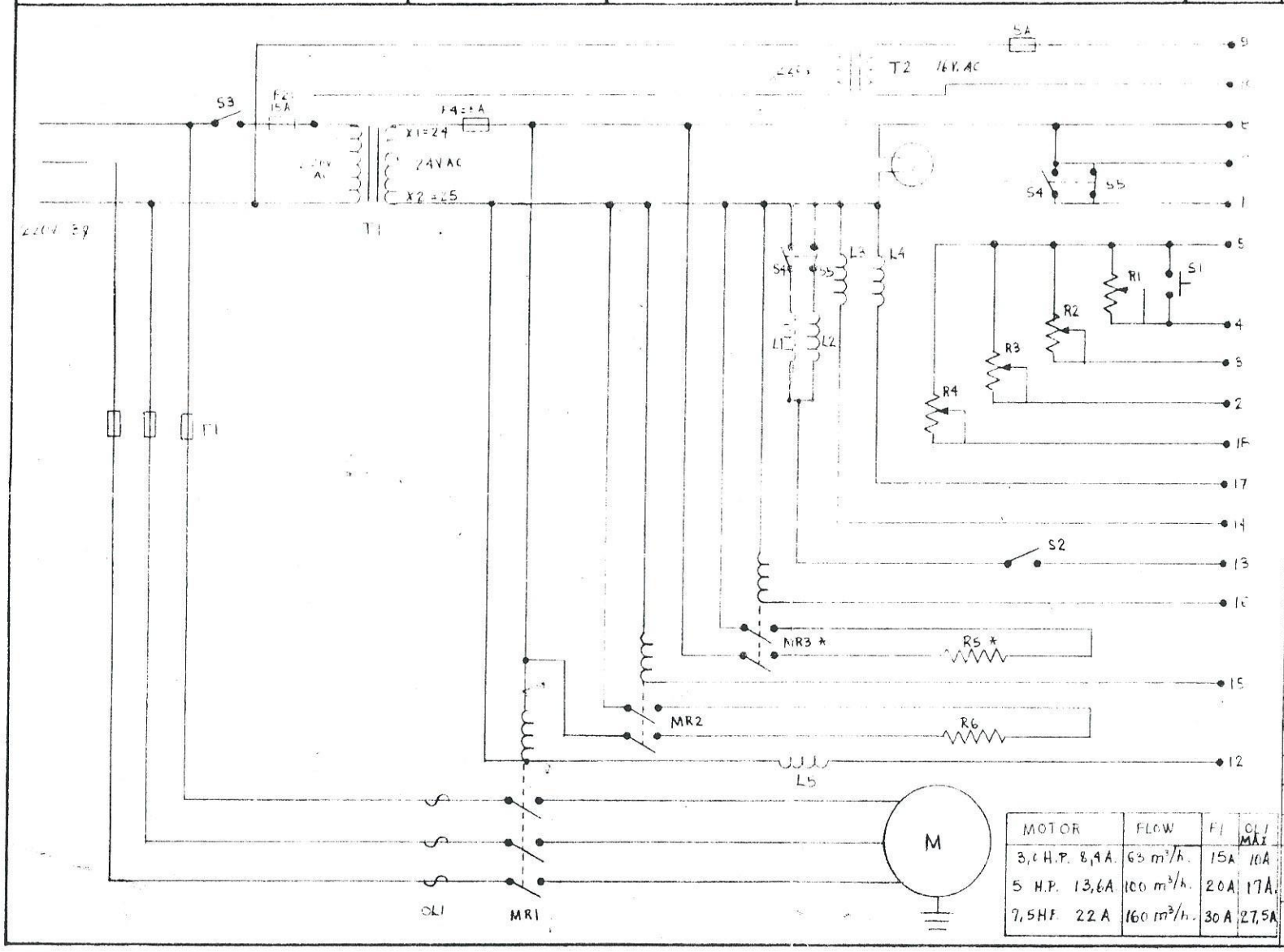

MOTOR	FLOW	F1	OLI MAX
3,0 H.P. 8,4 A.	63 m³/h.	15A	10A
5 H.P. 13,6A	100 m³/h.	20A	17A.
7,5 H.P. 22 A	160 m³/h.	30 A	27,5A

DESCRIPTION

R1	VACUUM POTENTIO METER
R2	GAS POTENTIO METER
R3	SEALING POTENTIO METER
R4	BAG CUTTER POT. (OPTION)
R5	BAG CUTTER ELEMENT (OPT.)
R6	SEALING BAR ELEMENT
L1-L2	SELENOID VALVE FOR GAS
L3	SELENOID VALVE FOR SEALING
L4	SELENOID VALVE FOR ATMOSPH.
L5	SELENOID VALVE FOR VACUUM
S1	CYCLE INTERRUPTION SWITCH
S2	GAS INTERRUPTION SWITCH
S3	MAIN SWITCH
S4	COVER SWITCH (LEFT)
S5	" " (RIGHT)
MR1	MAGNETIC RELAY - MOTOR
MR2	" " - SEALING
MR3*	" " - BAG CUTTER
T1	MAIN TRANSFORMER (750 VA)
T2	TRANSFORMER (32VA)
OLI	OVERLOAD
M	PUMP MOTOR
*	OPTIONNAL